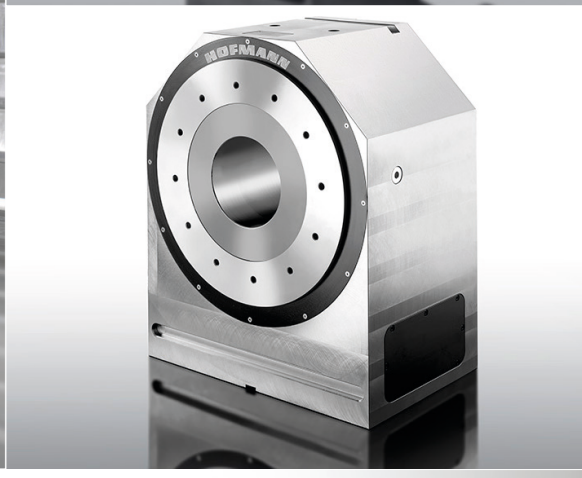

PRODUCT CATALOG

Your Partner For Quality And Precision

WERKZEUGSYSTEME
MÜLLER GMBH
HOFMANN
MESS- UND TEILTECHNIK

More than 60 years of tradition

The company history of HOFMANN

The company HOFMANN Mess- und Teiltechnik is looking back on a long tradition.

Founded in the year 1947 by Mr. Dionys Hofmann senior, the former company Dionys Hofmann was engaged with the manufacturing of knife grinding machines and balancing machines. The production of dividing units has additionally begun in 1948. Through the confusions of the 2nd world war, the company settled down in Onstmettingen, where the production of precision dividing units and rotary tables has begun.

As an independent company, the commercial line dividing technology has been bought out of the Dionys Hofmann GmbH in 1993. As Hofmann Mess- und Teiltechnik the company has been founded new by Dionys Hofmann junior.

In the year 2001 the company moved over into a new production and administration building in Grosselfingen. There has been a lot of effort invested int 4,000 square meters administration and production area for an innovative and ambitious company.

2009 Hofmann Mess- und Teiltechnik became a part of the corporate company Müller, with headquarter in Pliezhausen in the near of Reutlingen.

High product quality

All important components of HOFMANN products are manufactured in our state of the art production in Pliezhausen, Baden-Wuerttemberg. The compliance of high quality standards will be guaranteed by experienced employees, efficient production and measurement devices as well as by a quality management according to DIN EN ISO 9001.

SERVICE

Our customer service ensures a fast reaction in case of any problems.

We offer you the opportunity to have repaired a crashed dividing unit by our expert staff to our location in Pliezhausen as well as directly on your site.

Index

4

NC-DIVIDING UNITS

Our NC-Dividing Units are characterized by a compact and space saving design as well as by high stiffness. For very special applications, we develop customer and special solutions.

30

MANUAL DIVIDING UNITS

Our manual Dividing Units are particularly suitable for training workshops, manufacturing of single parts and for test constructions.

24

TAILSTOCKS AND ACCESSORIES

A wide range of matching accessories belongs to the portfolio of Hofmann Mess- und Teiltechnik.

Positioning CNC-controlled

Single-Axis NC-Dividing Units RWNC

MAIN CHARACTERISTICS

Excellently Perfomance and Accuracy Datas

- High indexing spindle speed for minimized non productive times
- High load capacity for the treatment of heavy workpieces
- Extensive automation features
- Exceptionally exact geometry datas within the µ-range
- Dividing accuracy up to the range of one tenth of a second of arc

Surface coated gear box

- High corrosion resistance
- Durability and high availability
- Function and appearance remain over years

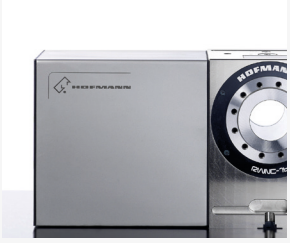

Solid motor cover made of stainless steel

- With internal fixing
- Much more solid in comparison to motor covers made of other materials
- Sealed design by sealing on the planar side

Sunked and flushed covers and closures on the gear box

- Appealing appearance
- Uninterrupted flow of chips and coolants
- No ingoing gaps

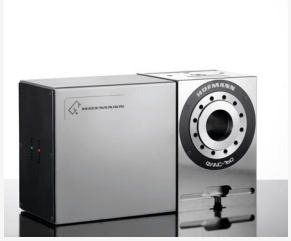

Attractive Design

- Suitable to current machines of well known manufacturers

ADVANTAGES

CNC-dividing units from the Hofmann RWNC-series are especially characterised by a reliable, robust and solid design. The customer gets a reliable and individual solution according to the particular applicaton in combination with extraordinary high accuracy values.

The eccentric adjustable worm gear consits of a case hardened worm shaft and a worm wheel made of an extraordinary wear resistant bronze alloy.

A significant low current consumption in comparison to torque drives will be achieved by a low friction and a low backlesh run in combination with a high perfomance lubricant.

The sophisticated design ensures a failure free operation at everytime for years and gives hereby an important input for the efficiency of your company.

AT A GLANCE

- Highest precision by manufacture and quality control in our own company
- Low energy consuption in comparison to torque drives
- Hgh rigidity by heavy duty axial-/radial ball bearings and worm drive with big diameter
- Eight different design sizes available
- Backlesh of worm drive easily adjustable
- Wide variety of motor installations
- Wide range of accessories available
- Attractive price-performance ratio
- Easy to service
- Special designs for customer specific applications easy realizable (see right image)
- Compact construction
- Matured construction
- Long lasting and modular extendible
- Fast customer service

Positioning CNC-controlled

Single-Axis NC-Dividing Units RWNC

TECHNICAL DATA

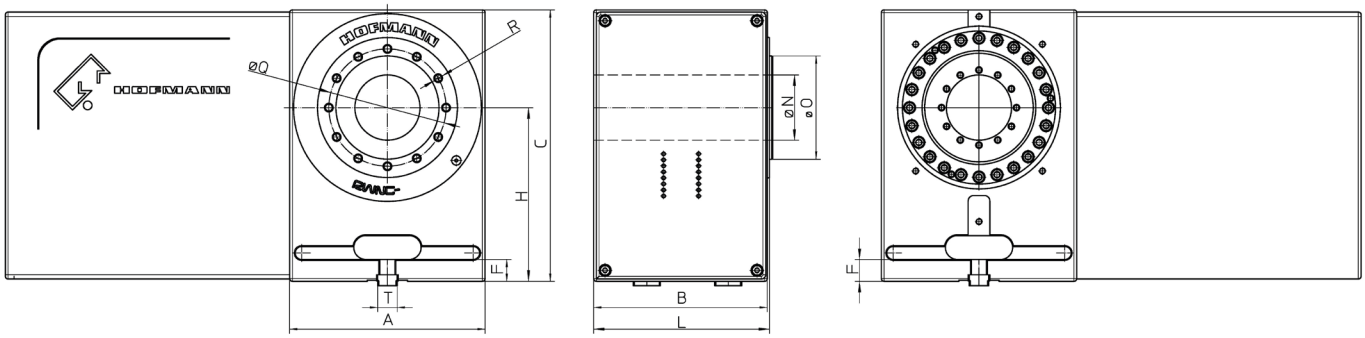

Type/centre height	(mm)	75	100	125	160	220	300	380	400
A	(mm)	70	90	120	180	260	430	520	600
B	(mm)	100	130	145	160	195	210	270	300
C	(mm)	110	145	185	250	350	510	640	700
F	(mm)	16	20	20	20	20	40	40	40
H	(mm)	75	100	125	160	220	300	380	400
L (spindle system)	(mm)	102	132	147	162	197	217	280	310
N	(mm)	18	17	30	60	80	150	200	320
O h6	(mm)	30	40	60	95	160	410	480	540
Q	(mm)	40	52	76	108	190	320	380	450
R	(mm)	4 x M5	4 x M8	4 x M8	12 x M8	12 x M10	12 x M12	12 x M16	12 x M16
T h6	(mm)	according to customers request							
Weight	(kg)	6	12	30	60	125	300	540	800

SIZES

An almost full and complete range of individual customer wishes will be covered by our modular design, which offers a large variability by currently eight different sizes and a wide range of different motor mounting variations.

DESIGNS

Individual solution for every application:

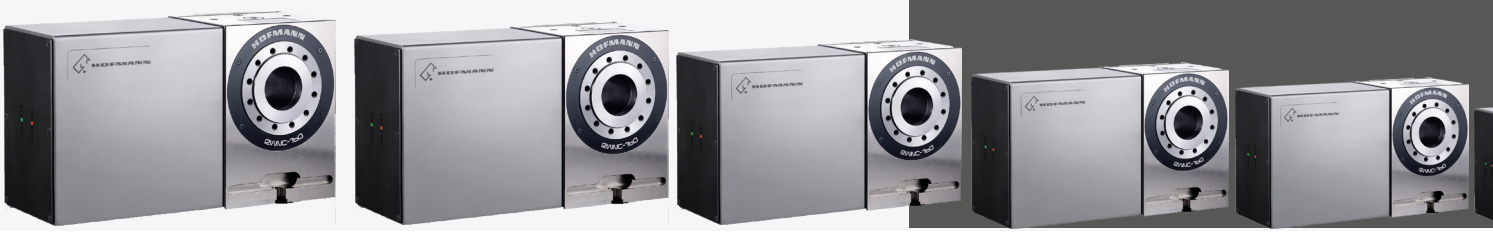

Accuracies

Type/centre height	(mm)	75	100	125	160	220	300	380	400
Indexing accuracy (standard) indirect position feedback	(sec)	± 45	± 45	± 20	± 15	± 10	± 10	± 10	± 10
direct position with RCN 2xx / bearing	(sec)	-	± 5	± 5	± 5	± 5	± 5	± 5	± 5
direct position with RCN 25xx / 55xx	(sec)	-	± 2.5	± 2.5	± 2.5	± 2.5	± 2.5	± 2.5	-
direct position with RCN 83xx / 85xx	(sec)	-	± 1.5	± 1.5	± 1	± 1	± 1	± 1	-
Circular runout of internal and external spindle taper	(mm)	0.01	0.01	0.01	0.01	0.01	0.01	0.01	0.01
Axial runout of indexing spindle face	(mm)	0.01	0.01	0.01	0.01	0.01	0.01	0.01	0.01

Load and performance data

Type/centre height	(mm)	75	100	125	160	220	300	380	400
Reduction ratio worm gear	(i)	45:1	45:1	60:1	90:1	90:1	90:1	120:1	120:1
Spindle speed at indexing operation	(U/min)	135	135	50	35	35	35	17	17
Load capacity with vertical indexing spindle	(kg)	45	180	340	750	1,200	3,500	5,000	8,000
Load capacity with horizontal indexing spindle	(kg)	25	45	95	200	320	650	1,000	1,500
Load capacity with horizontal indexing spindle and tailstock	(kg)	40	80	170	400	900	2,000	3,000	4,000
Load capacity with horizontal indexing spindle and support	(kg)	-	-	340	800	1,800	4,000	6,000	8,000
Maximum axial forces	(kN)	3	17	24	45	55	75	95	120
Maximum workpiece torque	(Nm)	150	500	1,000	3,000	6,000	10,000	14,000	18,000
Clamping moment at 160 bar	(Nm)	120	250	750	1,400	3,000	7,500	15,000	28,000

- Centre heights:
  75, 100, 125, 160, 220, 300, 380, 400 (mm)
- Indirect measurement systems
- Direct measurement systems for increased indexing accuracy
- Mounting of all motor typs according to customers request
- Increased circular or axial runouts
- multi-spindle versions

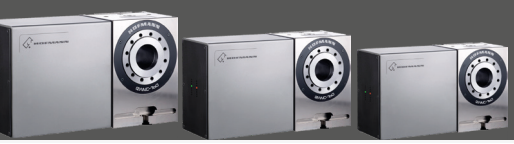

- Installation of rotary distributor for hydraulic or pneumatic possible 2-, 4-, 6-fold
- different versions of indexing spindle:
  - Cylindrical bore (standard)
  - Morse taper MT
  - Short taper ST
  - Steep taper
  - Hollow shaft cone HSK
  - Customer spindle solutions

ACCESSORIES

Tailstocks

- For a safe support and a low vibration fixture of long workpieces
- Manual, pneumatic or hydraulic operation
- Centre heights according to customers request
- Different sizes and taper fixures availabe

Supports

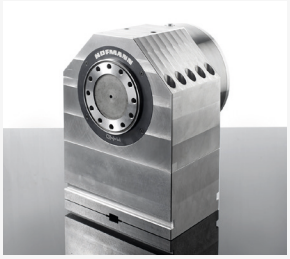

- Designed for the fixation of clamping bridges or similar clamping devices
- Available without clamping or with clamping 400 Nm, 1,000 Nm, 2,000 Nm
- Different sizes and centre heights available
- Diverse special models

Three and four jaw chucks (manual and hydraulic)

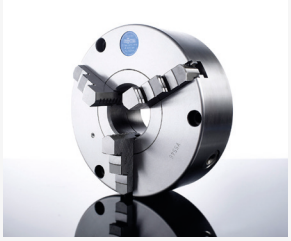

- Precision chucks of renowned manufacturers for accurate and powerful clamping of very different workpieces
- Automatic workpiece clamping via hydraulic cylinder realisable

Face plates

available in various diameters and versions:

- Easy and safe clamping of workpieces
- Special versions for every diameter available

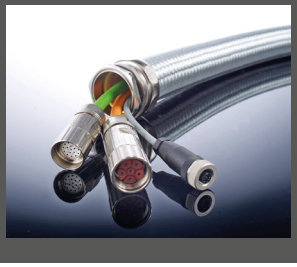

Controls

- Control of the dividing unit via M-function of the machine by independent CNC-control
- Independent CNC-control for the drive
- No preparation on the side of the machine necessary, for the operation of a 4th axis
- Interface and wiring complete and ready for operation for the connection to the machine control

Interfaces | Power supply

- Large selection of standard interfaces/power suppies for machines of many renowned manufacturers available
- Individual and flexible design of interface/power supply

Hydraulic units | pressure converters

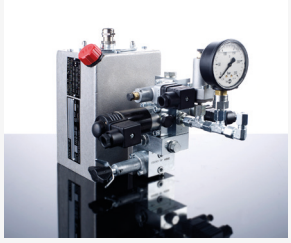

- Unit to be installed independently and externally, for the supply of the dividing unit with hydraulic pressure
- Integrated pressure converters

Collet chucks

- Allowing high precision and centric clamping of turned parts and semifinished products
- Assembly of different collt chuck manufacturers like Hainbuch, Ortlieb a. s. o.
- Possibilities for automation on request

Spindle holders

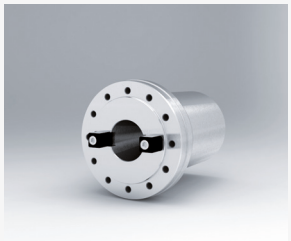

- Standarised spindle holders for flexible and automated worpiece fixture, e. g. ST, HSK, MT
- Circular runout within the µ-range

Clamping bridges

- Various flanges for dividing unit and support available
- Set of Kipp clamping bridges in various versions available:
  - Cube with or without bore pattern
  - Swing with or without bore pattern
  - Zero point clamping systems

Further accessories available upon request.

Motors

- Mounting of servo motors from a wide variety of manufacturers (Siemens, Heidenhain, Fanuc, Mitsubishi, Indramat) by versatile adapter system realizable
- Mounting variant (motor mounting straight, toothed belt drive, angle gear box) will be adapted to the conditions inside of the machine housing and the requirements of the customer

Direct Heidenhain measurement systems

- In case of high demands on indexing accuracy
- Indexing accuracy up to ± 1,5''

Positioning CNC-controlled

Single-Axis NC-Dividing Units RWNC

Long workpieces with large diameters can be machined through the use of the

RWNC-400

as an additional axis on machining centers of different manufacturers.

A special feature of this dividing unit is the spindle bore with a diameter of either 320 mm or 360 mm through which the workpieces can be pushed through. Dividing units with this size have usually spindle bores with a maximum bore diameter of 200 mm. This was made possible by a new design of the dividing spindle and housing, as well as a specially developed hydraulic clamping device for this unit.

Drilling Technology

Oil Industry

Mining

Therefore the RWNC-400 is especially appropriate to manufacturers of drilling technology, for the oil industry and mining.

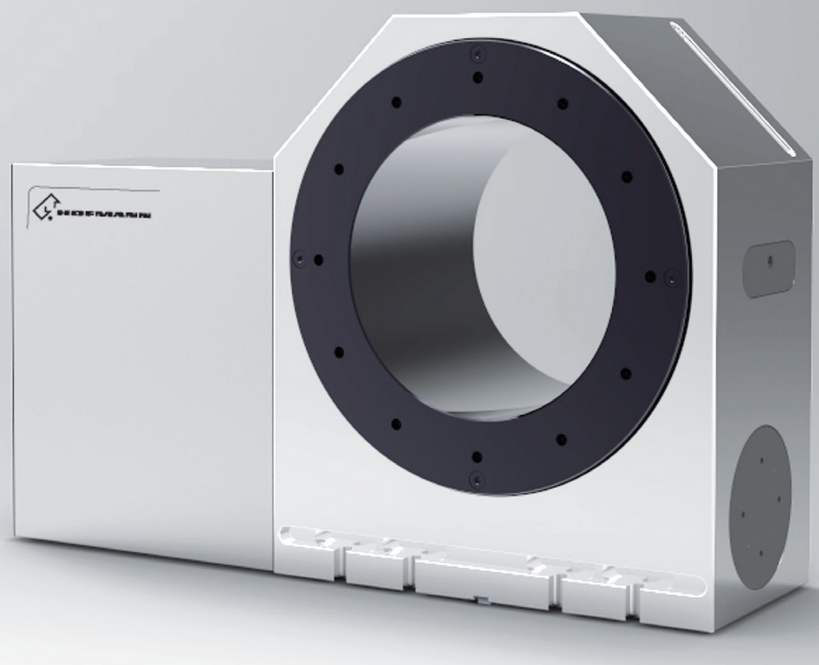

SPECIAL CHARACTERS

- Extremely wide spindle bore with a diameter of either 320 mm or 360 mm
- Machining of long workpieces through the spindle bore is possible
- High clamping moment of 28,000 Nm
- Centre height of 400 mm
- Surface coated gear box for high corrosion resistance
- Solid motor cover made of stainless steel with internal fixing
- Sunked and flushed covers and closures on the gear box

MULTI-SPINDLE DIVIDING UNITS

are available with 2, 3, 4, 5 and 6 indexing spindles. Centre heights and axis distances are adaptable according to customers requirements.

Depending on the axes distance, the indexing spindles are in a common housing or several one axes dividing units will be coupled on a base plate.

The multi-spindle dividing units correspond in construction the single-spindle RWNC-series.

Positioning CNC-controlled

Customer and Special Solutions

The Hofmann product segment when it comes to automation, cost savings and large quantities in your production.

With the extension of a HOFMANN additional axis from the product segment customer and special solutions, productivity of machining centers from different manufacturers can be increased efficiently.

The close dialogue with the customer is most important at the Hofmann customer and special solutions product segment in order to obtain the optimum solution for the respective application. Special features such as special mountings of the servomotor, connections to machine-side power supply or number and design of the workpiece holders are defined and implemented in close contact with the customer. In contrast to specified modular systems, there are virtually no limitation in design and construction.

SPECIAL FEATURES

- Design of a Hofmann special solution will be done in close dialogue with the customer
- Almost no limitation in design and construction
- Solid and rigid construction to achieve high cutting data
- Use of proven and reliable components from the standard Hofmann dividing units

PURPOSE/APPLICATIONS

- Production of large quantities
- Saving of set up- and tool change times
- Use on special machines
- Processing outside of defined standard solutions
- Retrofitting, flexibility and improved performance of existing machine concepts

Examples

HOFMANN RWNC-300 LD-Additional Axis

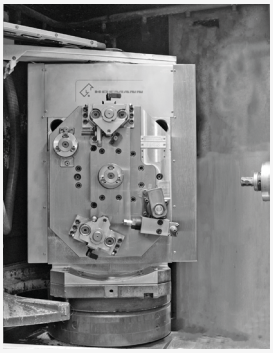

- In machine's work envelope the first workpiece is processing in the first device. Upon completion the dividing unit swivels 180 degrees for machining the second workpiece in the device on the back of the unit.
- On the front and back you always can install a workpiece clamping provided by customer.
- On the setting station both workpieces will be clamped onto the device in front as well as at the back of the dividing unit.

RWNC-220 in Special Design

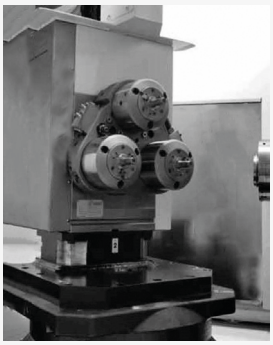

- Indexing spindle in double-sided design for taking up two hydraulic clamping devices at the front and back of the dividing unit.
- Dimensions of housing will be modified to the restricted space conditions.
- Hydraulic pressure supplies by hydraulic connection element central through the palette and the base area of the dividing unit.
- Installation of the servo motor to the dividing unit in consideration of the space conditions in the machine's work envelope.
- Indexing spindle with short taper and hole pattern according to customer specification for taking up the hydraulic clamping device.

RWNC-160/6 Additional Axis with six spindles for a machining center

- Clamping of six workpieces, be processed in a row with one tool in the same work operation
- Multi-sided machining in one set-up. It is no longer necessary to repeatedly relocate the workpiece.
- Setup in fast and simple way.

For special use cases when standard dividing units cannot be used or reach their limits, we develop special solutions - customized in accordance to your tasks and maschine technology.

Positioning CNC-controlled

Swivelling NC-Dividing Units RSNC

MAIN CHARACTERISTICS

- Swivelling NC-indexing devices RSNC are specially designed for use on machine tools and machining centers
- Thanks to the modular use of dividing units in the RWNC series, clients can specify a design which meets their specific needs easily & very cost effectively.
- Are compact units, prividing space-saving design
- Offer high levels of flexibility thanks to their modular construction
- Allow both turning & swivel axes to be positioned quickly and precisely
- Both turning & swivel axes are hydraulically clamped, achieving a high machining Performance
- Provide options for setting the correct nip pressure, by either the machine tool, a separate hydraulic unit or a pneumatic-hydraulic intensifier.
- Allow the worm gear to be set to a low amount of Play
- Allows play in the worm gear to be adjusted
- Continuous lubrication provides low maintenance & high durability
- Excellent price-performance Ratio
- mulit-spindle versions available

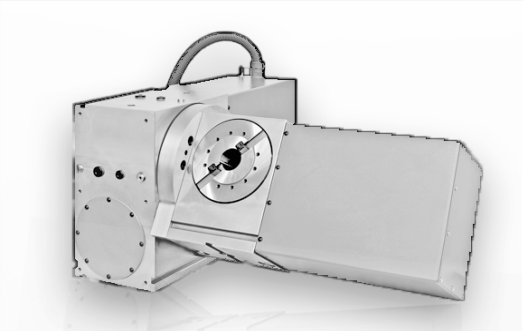

RSNC-xxx/xxxL
- for easy processing tasks
- high swivel range

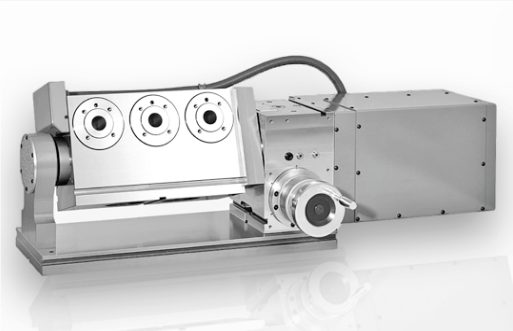

RS-M-xxx/xxx
- rotation axis with servomotor
- swivel axis manual with measuring drum

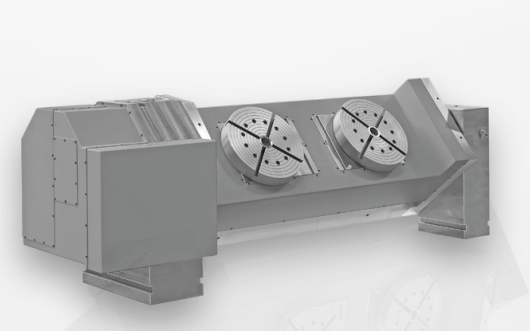

RSNC-xxx/xxx/x
- multi-spindle rotation axis
- special solution according to customer specification

OPTIONS

different types of indexing spindles:

- Modular design by using RWNC-types: 75, 100, 125, 160, 220, 300, 380 mm
- Direct measuring systems – for a high indexing accuracy
- All types of motors can be mounted at customers choice
- Rotating axis available in multi-spindle design with 2 to 5 spindles
- Support with clamping for increased holding troque of the tilting axis
- Different types of indexing spindles:
  - Cylindrical bore (standard)
  - Morse Taper MT
  - Short Taper ST
  - ISO Taper IT
  - Hollow Shank Taper HST
  - customized spindle design
- Increased axial and radial runout
- Mounting of a rotary distributor for hydraulic or pneumatic 2-, 4-, 6-fold available

CONNECTION

There are the following choices to interface a tilting dividing unit into a machine control:

- Rotation Axis: 4th axis of the machine CNC-control system
  Swivelling Axis: 5th axis of the machine CNC-control system
- Rotation Axis: Hofmann CNC-positioning control
  Swivelling Axis: Hofmann CNC-positioning control
- Rotation Axis: 4th axis of the machine CNC-control system
  Swivelling Axis: Hofmann CNC-positioning control
- Rotation Axis: 4th axis of the machine CNC-control system
  Swivelling Axis: manual with measuring drum

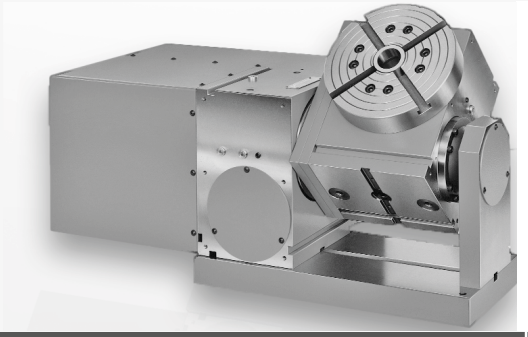

RSNC-xxx/xxxS
- cost-effective standard version
- swivelled not over the middle
- slim and long design

RSNC-xxx/xxxZ
- compact design
- swivelled over the middle

TECHNICAL DATA

Accuracies

Type		100/100	125/125	160/160	220/220
Dividing unit rotary axis		RWNC-100	RWNC-125	RWNC-160	RWNC-220
Dividing unit tilting axis		RWNC-100	RWNC-125	RWNC-160	RWNC-220
Tilting range, standard		0° bis 90°	0° bis 90°	0° bis 90°	0° bis 90°
Indexing accuracy with indirect measurement system					
rotary axis	(sec)	± 45	± 20	± 15	± 10
tilting axis	(sec)	± 60	± 30	± 25	± 20
Indexing accuracy with direct measurement system					
rotary axis with RCN 2xxx	(sec)	± 5	± 5	± 5	± 5
rotary axis with RCN 25xx / 55xx	(sec)	± 2.5	± 2.5	± 2.5	± 2.5
rotary axis with RCN 83xx / 85xx	(sec)	± 1.5	± 1.5	± 1	± 1
tilting axis with RCN 2xxx	(sec)	± 10	± 10	± 10	± 10
tilting axis with RCN 25xx / 55xx	(sec)	± 5	± 5	± 5	± 5
tilting axis with RCN 83xx / 85xx	(sec)	-	± 4	± 4	± 4
Radial runout	(mm)	0.01	0.01	0.01	0.01
Axial runout	(mm)	0.01	0.01	0.01	0.01
Gear ratio of worm gearing	(i)	45:1	60:1	90:1	90:1
Gear ratio of timing belt/ bevel gear	(i)	2:1	2:1	2:1	2:1
Maximum load capacity for tilting	(kg)	40	80	125	200
Clamping moment of spindle clamping					
Rotary axis	(Nm)	200	400	1,000	2,000
Tilting axis	(Nm)	200	400	1,000	2,000
Tilting axis with support clamping (standard)	(Nm)	400	800	1,400	3,000
Tilting axis with support clamping (increased)	(Nm)	-	1,400	2,000	4,000
Tilting moment with clamping, maximum	(Nm)	220	450	1,125	2,200
weight (without motors)	(kg)	40	60	140	350

ACCESSORIES

Face plates with T-Slots
(according to DIN 650)

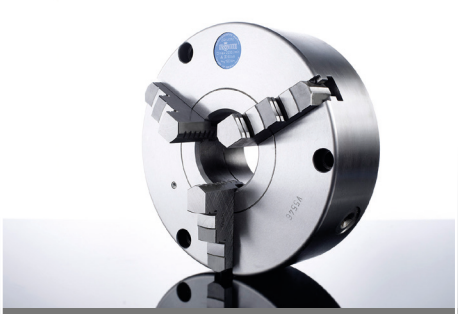

Three-/Four-Jaw-Chucks

Tailstocks manual, pneumatic or hydraulic applied

Collet Chucks

Power Chucks

Centers and Carriers

Clamping Systems,
e. g. Erowa; Hirschmann; Mecatool; System 3 R

Pressure Booster
pneumatic/hydraulic

HOFMANN CNC-Control System

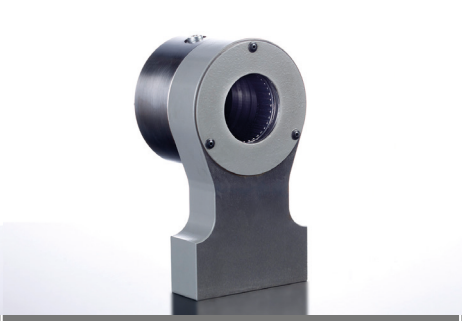

Supports with or without clamping

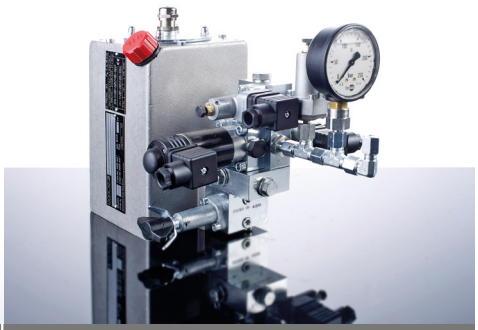

Hydraulic Power Pack for axis clamping system

Direct driven

Single-Axis NC-Rotary Tables HD

MAIN CHARACTERISTICS

- NC indexing device series with a direct drive for use as a 4th axis on a machining centre
- Highest precision thanks to in-house production and quality control
- Housing is applicable for horizontal and vertical turning axis
- Absolutely free of clearance thanks to the torque motor
- Almost free from wear for stable quality
- High speeds and torques achievable because of the torque motor
- Various direct measuring systems compliant with the precision requirement deliverable
- High rigidity by using an axial-radial angular contact ball bearing
- Pneumatic safety clamping:
  - Declamping with 6 bar
  - Clamping with 0 bar by means of a spring assembly (emergency stop)
  - Clamping force doubled with spring assembly and 6 bar at the opposite site
- Wide range of accessories available

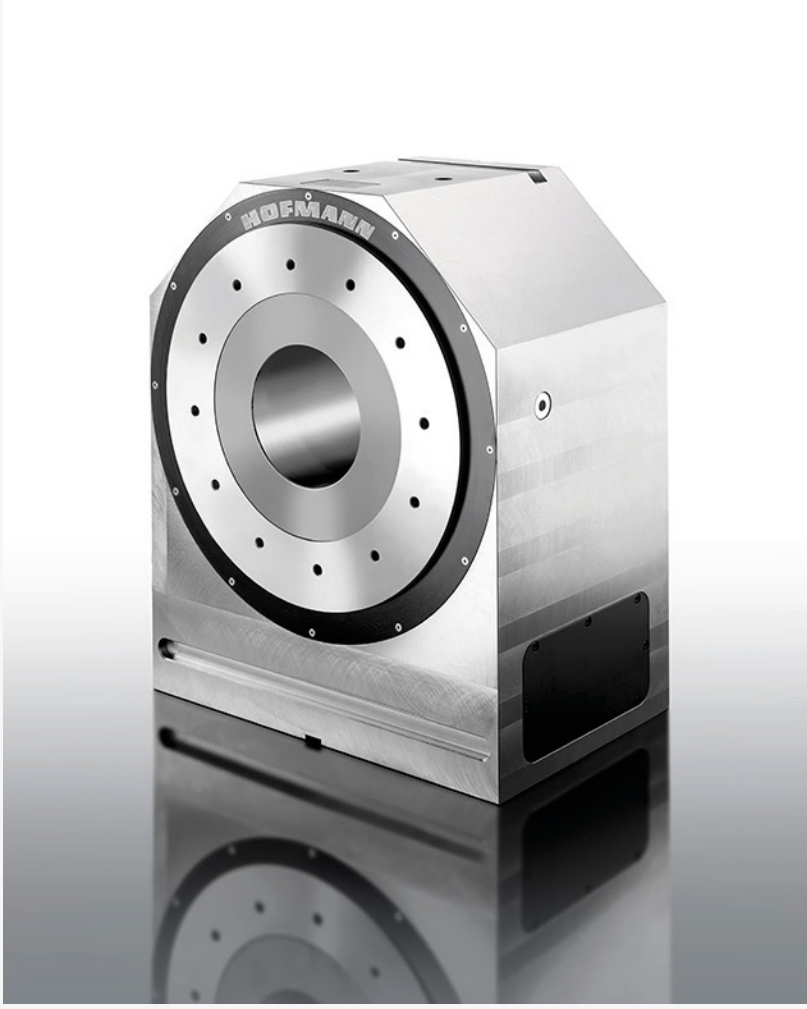

SWIVELLING DIVIDING UNITS HDS

Swivelled dividing units HDS are using dividing units from HD series as rotating and tilting axis. The modular design allows an easy adaptation to customer requirements.

Multi spindle versions, hydraulically clamped supports and direct measuring systems are available as well.

SPECIAL VERSIONS HD-HDS

- Outside dimensions of dividing unit in a cubic or round housing according to the machine interior
- Drive design on rotation speed or high torque
- Drive with torque motors according to customers specification
- Combination of worm drive and torque motor at tilting dividing unit
- Accessories like dividing units RWNC

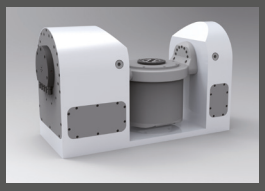

TECHNICAL DATA

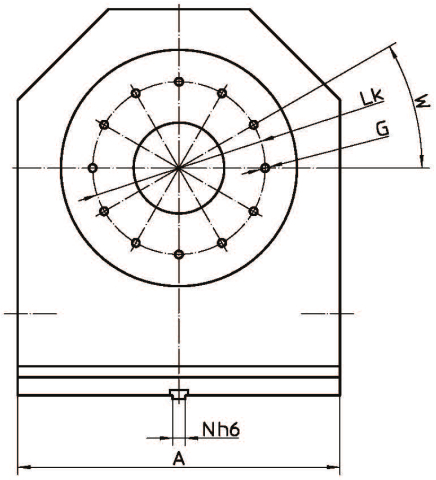

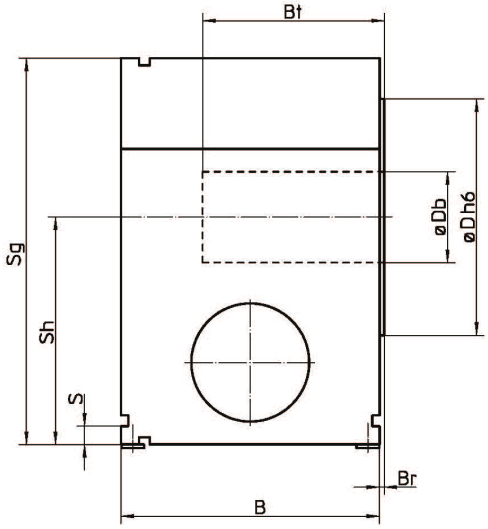

Type		A	B	Br	Bt	Ø D h6	Ø Db	G	Lk	N h6	S	Sh	Sg	W
HD-200/50	(mm)	260	220	7	100	100	65	M8/16	82	10-36	20	200	330	12x30°
HD-200/75			245		125									
HD-200/100			270		150									
HD-200/125			295		175									
HD-250/50	(mm)	360	260	8	150	250	100	M10/20	200	10-36	20	250	540	12x30°
HD-250/75			285		175									
HD-250/100			310		200									
HD-350/50	(mm)	480	285	10	175	410	150	M12/24	320	10-36	40	350	590	12x30°
HD-350/75			305		200									
HD-350/100			335		230									
HD-400/50	(mm)	580	320	15	226	480	200	M16/32	380	10-36	40	400	690	12x30°
HD-400/75			340		246									
HD-400/100			370		276									

Direct driven

Single-Axis NC-Rotary Tables HD

Type		200/50	200/75	200/100
Weight	(kg)	125	140	155
IDAM Motor Typ		RI17-3P	RI17-3P	RI17-3P
IDAM Motor Size		168x50	168x75	168x100
Spindle RPM with design L	(1/min)	334	207	143
Spindle RPM with design M	(1/min)	721	461	332
Spindle RPM with design H	(1/min)	x	x	x
Drive torque uncooled	(Nm)	32	50	67
Drive torque cooled	(Nm)	76	121	168
Indexing accuracy with ECN 113	(sec)	± 30“	± 30“	± 30“
Indexing accuracy with RCN 2xxx	(sec)	± 5“	± 5“	± 5“
Indexing accuracy with RCN 5xxx	(sec)	± 2.5“	± 2.5“	± 2.5“
Indexing accuracy with RCN 8xxx	(sec)	± 1“	± 1“	± 1“
Circular runout of indexing spindle face	(mm)	0.01	0.01	0.01
Axial runout of indexing spindle face	(mm)	0.01	0.01	0.01
Pressure for declamping safety clamping	(bar)	6.0	6.0	6.0
Holding torque of safety clamping at 0 bar (zero pressure	(Nm)	240	240	240
Holding torque of clamping with supplementary air 6 bar	(Nm)	420	420	420
Maximum load capacity for horizontal axis	(kg)	200	200	200
Maximum load capacity for horizontal axis with tailstock	(kg)	400	400	400
Maximum load capacity for horizontal axis with support	(kg)	800	800	800
Maximum load capacity for vertical axis	(kg)	750	750	750
Maximum axial force	(KN)	45	45	45
Maximum radial force	(KN)	15	15	15
Tilting moment at closed clamping with supplementary air	(Nm)	3,000	3,000	3,000

200/125	250/50	250/75	250/100	350/50	350/75	350/100	400/50	400/75	400/100
170	235	260	285	415	460	505	680	750	820
RI17-3P	RI11-3P	RI11-3P	RI11-3P	RI13-3P	RI13-3P	RI13-3P	RI11-3P	RI11-3P	RI11-3P
168x125	250x50	250x75	250x100	298x50	298x75	298x100	384x50	384x75	384x100
106	284	178	126	213	134	95	143	71	50
257	361	229	163	443	282	204	203	127	92
x	x	x	x	x	x	x	x	x	x
82	71	111	152	130	204	277	180	290	402
214	163	262	363	349	486	676	468	755	1.043
± 30″	± 30″	± 30″	± 30″	± 30″	± 30″	± 30″	± 30″	± 30″	± 30″
± 5″	± 5″	± 5″	± 5″	± 5″	± 5″	± 5″	± 5″	± 5″	± 5″
± 2.5″	± 2.5″	± 2.5″	± 2.5″	± 2.5″	± 2.5″	± 2.5″	± 2.5″	± 2.5″	± 2.5″
± 1″	± 1″	± 1″	± 1″	± 1″	± 1″	± 1″	± 1″	± 1″	± 1″
0.01	0.01	0.01	0.01	0.01	0.01	0.01	0.01	0.01	0.01
0.01	0.01	0.01	0.01	0.01	0.01	0.01	0.01	0.01	0.01
6.0	6.0	6.0	6.0	6.0	6.0	6.0	6.0	6.0	6.0
240	1,000	1,000	1,000	2,340	2,340	2,340	3,300	3,300	3,300
420	1,950	1,950	1,950	4,200	4,200	4,200	6,100	6,100	6,100
200	320	320	320	650	650	650	1,000	1,000	1,000
400	900	900	900	2,000	2,000	2,000	3,000	3,000	3,000
800	1,800	1,800	1,800	4,000	4,000	4,000	6,000	6,000	6,000
750	1,200	1,200	1,200	3,500	3,500	3,500	5,000	5,000	5,000
45	55	55	55	75	75	75	95	95	95
15	20	20	20	25	25	25	35	35	35
3,000	6,000	6,000	6,000	10,000	10,000	10,000	14,000	14,000	14,000

Manufacturing of Assemblies and Rotary Axis

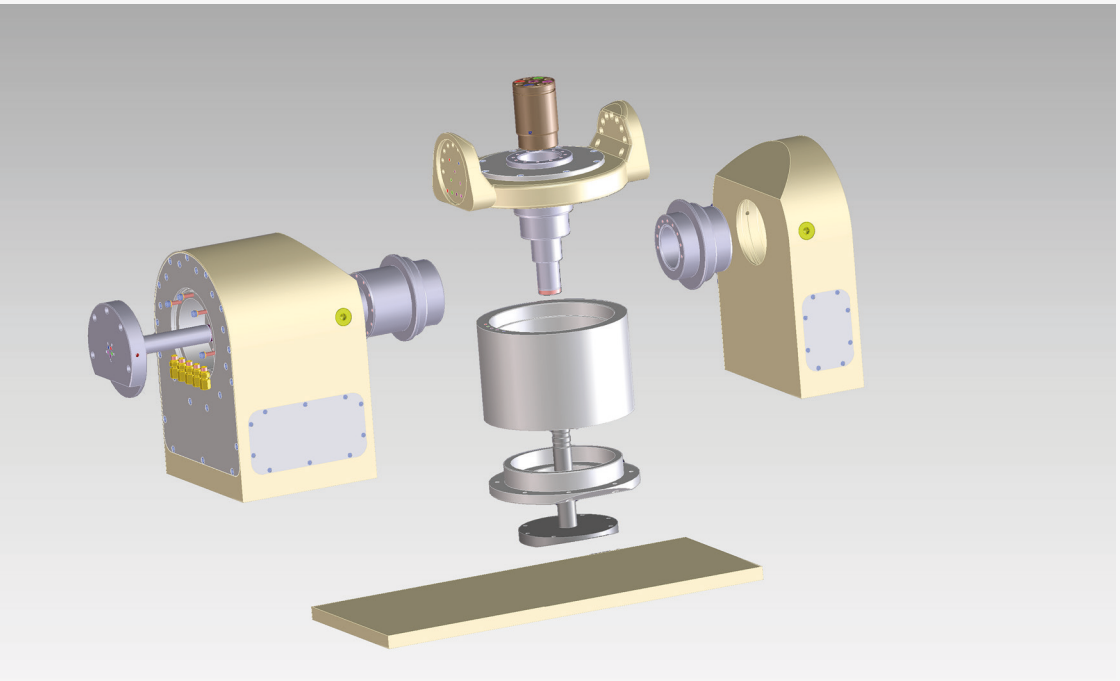

The manufacturing of assemblies and rotary axis is also part of our product range.

HOFMANN supplies rotary axis with torque drive ordered by renowned machine manufacturers.

They are completely ready to install and produzed according to customers specifications. The necessary parts are produced exclusively in-house.

This ensures quality and delivery readiness. Relevant for the design of the rotary axis is the exclusivly construction of the machine manufacturer.

ADVANTAGES OF OUR MANUFACTURING OF ASSEMBLIES AND ROTARY AXIS AT A GLANCE

- One-stop supply
- One contact person for all interests
- Delivery of the rotary axis ready for install inclusive electrical connections
- Service for respective application from Hofmann Mess- und Teiltechnik
- Cost saving through elemination of costlier purchasing processes from many supplier
- High-quality execution as a result of our long-time experience in the field of dividing units and rotary axis with in-house production and Installation according to ISO 9001

MANUFACTURING OF ASSEMBLIES FROM HOFMANN OFFERS SIGNIFICANT ADVANTAGES FOR THE FOLLOWING MANUFACTURER

- of tool grinding machines
- of machining centers
- of special machines
- Machine manufacturers without in-house parts production

Tailstocks RE

MAIN CHARACTERISTICS

- Tailstocks RE have been specially developed for joint use with indexing devices on machine tools and machining centres
- Compact and space saving design
- Solid structural design for high rigidity
- High flexibility by modular design
- High cutting performance realisable
- Large footprint for maximum vertical stability
- Tailstock spindle extends base area allowing an improved working area
- Tailstock spindle available with morse taper
- Low maintenance bearing
- Tailstock spindle bearing reliably sealed against ingression of coolant or chips
- Tailstocks with higher accuracy also available
- Wide range of special accessories available
- Very competitive price to performance ratio

DESIGNS

- Center heights can be freely selected within indicated range of the dimensional chart
- Morse taper sizes can be freely selected within indicated range of the dimensional chart
- Manually operated tailstocks with removal of the tailstock center via threaded spindle
- Pneumatic and hydraulic operated tailstocks with removal of the tailstock center via extraction nut
- Tailstocks are also available with double-stroke spindles
- Manual, pneumatic or hydraulic tailstocks available
- Hydraulic and pneumatic tailstocks are available with spindle stroke monitoring option
- Manual tailstock with lever operated clamping attachment, clamping lever can be mounted on left hand or on right hand side
- Base area with tennon keys, size selectable from 10 to 36 mm
- Clamping bolts for most T-slot sizes available
- Live centers or dead centers can be used
- Tailstock spindle assembly available without base assembly's for customized designs allowing the use of proven spindle technology
- Multi-spindle tailstocks or special designs available on request

RE-60 hydraulic tailstock

RE-40 pneumatic tailstock

RE-25 manual tailstock

TECHNICAL DATA

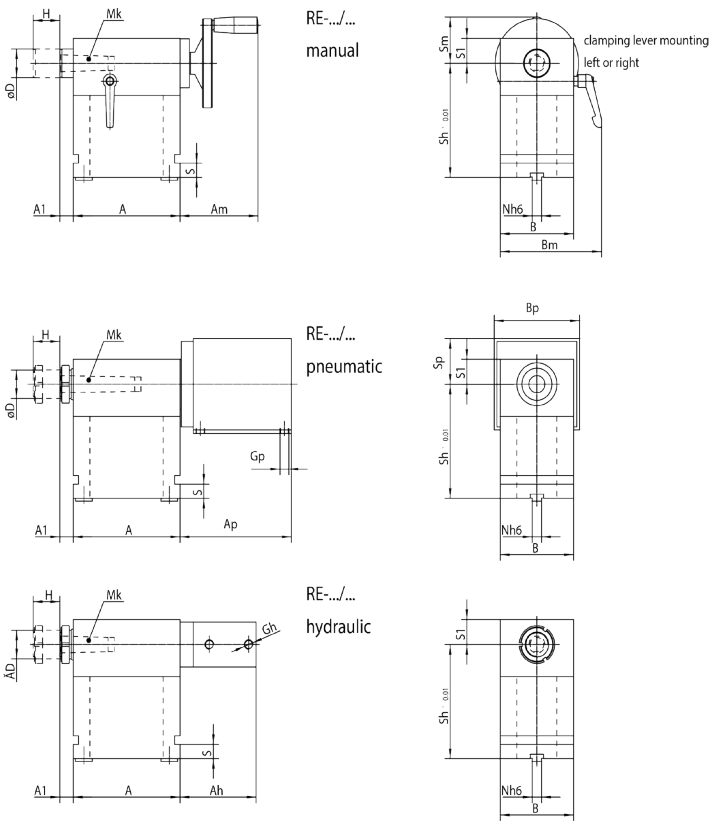

Size		RE-25/...	RE-40/...	RE-60/...	RE-100/...
A	(mm)	120	160	250	400
A1	(mm)	18	20	25	35
Ah	(mm)	84	114	162	230
Am	(mm)	94	117	143	180
Ap	(mm)	90	127	181	249
B	(mm)	80	110	150	250
Bm	(mm)	121	152	223	323
Bp	(mm)	87	128	178	226
D	(mm)	25	40	60	100
Gh	(Zoll)	1/4	1/4	1/2	1/2
Gp	(Zoll)	1/8	1/4	3/8	3/4
H	(mm)	25	40	60	100
Mk		1/2	2/3	4/5	5/6
N	(mm)	10-36	10-36	10-36	10-36
S	(mm)	20	20	40	40
S1	(mm)	25	35	50	80
Sh	(mm)	70-475	80-465	110-450	165-450
Sm	(mm)	50	65	84	128
Sp	(mm)	43,5	64	89	113

Accuracies

Size		RE-25/...	RE-40/...	RE-60/...	RE-100/...
Weight at smallest centre height	(kg)	8.5	19	57	175
Add. weight per mm centre height increase	(kg)	0.05	0.1	0.18	0.37
Axial force at 6 bar pneumatic pressure	(N)	1,870	4,700	12,000	18,800
Axial force at 40 bar hydraulic pressure	(N)	1,900	5,000	12,400	31,400
Maximum workpiece weight	(kg)	100	200	800	2,000
Parallelism tennon key to tailstock sleeve	(mm)	0.02	0.02	0.02	0.02
Alignment tennon key to tailstock sleeve	(mm)	0.02	0.02	0.02	0.02

Supports GH

MAIN CHARACTERISTICS

Supports of the series GH has been specially developed for use on HOFMANN indexing devices on machine tools and machining centres.

They characterized by their compact, space-saving design. Particular attention was paid during design to high rigidity and almost flexibility thanks to a modular system. A wide range of machining options can be realized thanks to the strong bearing bolts overhanging from the base, boasting a centring device and an indexing circle with fixing threads.

Low-maintenance bearing and a reliable seal to withstand chips and coolant lay a solid foundation for a long operational life.

The counter bearing is interpreted as floating bearing with ± 1 mm axial play out of the central position.

A comprehensive range of accessories enables you to adjust the steady to meet your custom requirements.

DESIGNS

- Centre heights within dimension table selectable
- Centre heights X +/- 0,01 mm
- Compatible T-Slots in widths 10 mm to 36 mm
- The support top is also qualified for separate use in special solutions provided by customer
- With or without hydraulic clamping available
- Large clearance hole for medias or cable buschings possible
- Mounting of rotary distributor for hydraulic or pneumatic possible
- Optional end-position control for swivel movement
- Endless rotation possible
- Spindle flange for Assembly of accessories from our RWNC-range available e. g. clamping bridges, face plates, jaw chucks
- Clamping set for all popular T-slot widths available

TECHNICAL DATA

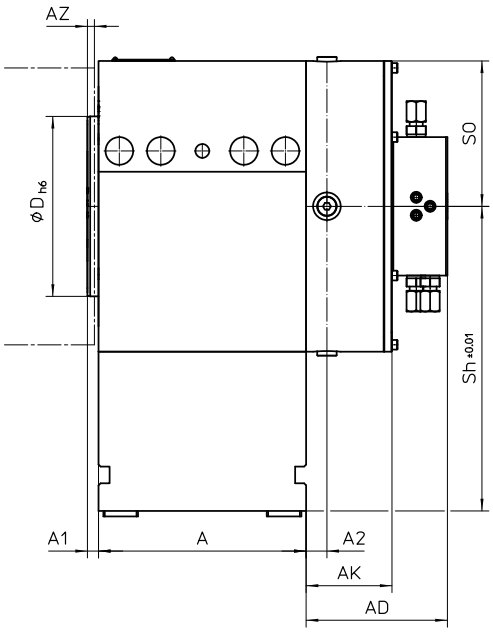

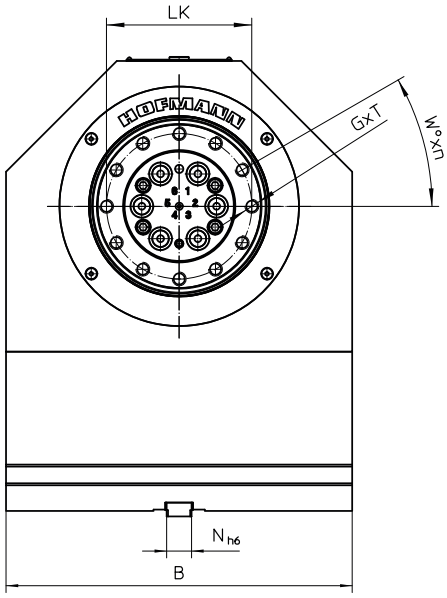

Size		**4**	**5**
Weight Top without clamping without spindle bore	(kg)	50	185
Weight clamping	(kg)	15	45
Weight spindle bore without clamping	(kg)	-5	-25
Weight spindle bore with clamping	(kg)	-8	-35
Additional weight per mm center height increase	(kg)	0,18	0,30
Additional weight rotary distributor 2-, 4-, 6-fold	(kg)	15	25
Center height	(mm)	140 - 450	240 - 500
Center height top	(mm)	105	175
Center height lower part standard min.	(mm)	35	65
Floating bearing axial flexible	(mm)	± 1	± 1
Center offset from bearing bolt to slot nuts	(mm)	0.02	0.02
Parallelism from bearing bolt to slot nuts	(mm)	0.02	0.02
Center height	(mm)	± 0.01	± 0.01
Maximum support load	(kg)	1,000	2,000
Maximum machining force radial force	(KN)	15	20
Clamping moment hydraulic clamping at 160 bar	(Nm)	2,000	7,500
Clamping moment spindle clamping at 160 bar (mathematical)	(Nm)	1,407	5,130
Maximum oil demand for clamping once	(cm^3)	1.42	3.45
Rotary distributor hydraulic 250 bar	(pcs)	2 - 4 - 6	2 - 4 - 6
Rotary distributor pneumatic 25 bar	(pcs)	2 - 4 - 6	2 - 4 - 6

Single-Axis or Biaxial Dividing Units EDR / EDS

SERIES EDR

- Single-Axis dividing unit can be used with a horizontal or vertical turning axis. They are specially designed for use on EDM machines
- These units are issued with IP67 protection class and use non-corrosive materials to enable use in a corrosive non-conductor.
- Compact, space saving design for heavy duty machining operation
- High flexibility through variable modular system
- Slightly modify to spatial conditions by mounting drive motor at housing left hand or right hand
- Indexing Spindle with bore pattern available to customers specification
- Allow the worm gear to be set to a low amount of Play
- Allows play in the worm gear to be adjusted
- Using of indirect and direct measuring systems in according to needed indexing accuracy
- Earth connection am Gehäuse immediate at the indexing spindle
- Low maintenance due to permanent lubrication

CONNECTION

The connection of the NC-Dividing Unit EDR is made alternatively as:

- Integrated 4th axis with consisted AC-servo motors for existing machine control
- Positioning axis with HOFMANN Single-Axis-Positioning-Control. The connection to the machine control is based on the M-Signal-Function

SERIES EDS

- Swivelling NC-indexing devices for use on EDM machines with horizontal or vertical turning axis consisting of two dividing units of the series EDR
- These units are issued with IP67 protection class and use non-corrosive materials to enable use in a corrosive non-conductor
- High flexibility through variable modular system
- Slightly modify to spatial conditions by mounting drive motor at housing left hand or right hand
- Indexing Spindle with bore pattern available to customers specification
- Using of indirect and direct measuring systems in according to needed indexing accuracy
- Earth connection am Gehäuse immediate at the indexing spindle
- Low maintenance due to permanent lubrication

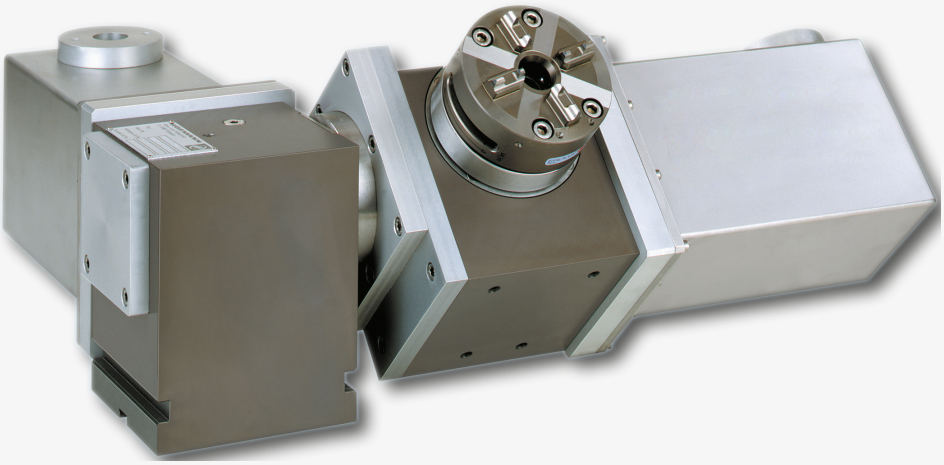

CONNECTION

The connection of the NC-Dividing Unit EDS is made alternatively as:

- Rotation and tilting axis used as integrated 4th and 5th axis with consisted AC-servo motors for existing machine control
- Rotation and tilting axis used as positioning axis with HOFMANN Two-Axis-Positioning-Control. The connection to the machine control is based on the M-Signal-Function
- Rotation axis used as integrated 4th axis with consisted AC-servo motors for existing machine control. Tilting axis used as positioning axiss with HOFMANN Single-Axis-Positioning-Control. The connection to the machine control is based on the M-Signal-Function

Dividing manually

Manual Precision Rotary Tables RH

MAIN CHARACTERISTICS

- Manual precision rotary table with compact and space saving design. The high rigidity allows the use for machine tools as well as for measuring applications
- Table plate with 200 mm diameter and 360° graduation scale on the table plate circumference with zero point mark on the housing
- Due to the low height and the light weight, the rotary tables are especially suitable for engraving and milling work
- Manually operated worm gearing with eccentric worm shaft bearing for backlash adjustment or easy disengaging for rapid indexing
- Relief of worm gear by two mechanical down hold clamps running in a notch on circumference of the table plate

DESIGNS

- RH Rotary table with graduating drum and vernier scale for indirect indexing
- RHI Rotary table with dividing plate indexing device for indirect indexing of all divisions up to 50

ACCESSORIES

- Manual three-jaw chuck with intermediate flange to be attached to the table plate
- Hand wheel with micrometer dial and indexing plate device are interchangeable
- Additional direct indexing plate for the indexing plate device for all divisions up to 100 and higher ones, many up to 400, with included adjusting table

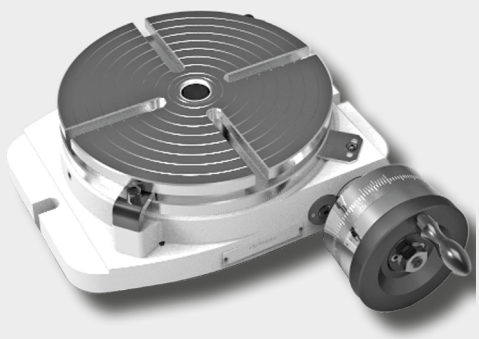

Precision Rotary Table RH-20

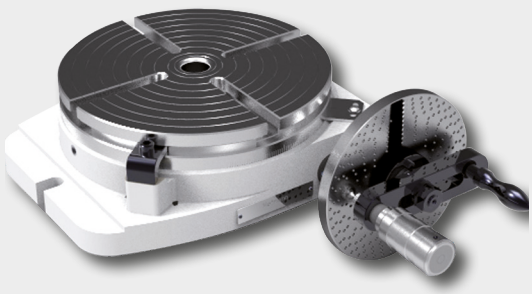

Precision Rotary Table RHI-20

TECHNICAL DATA

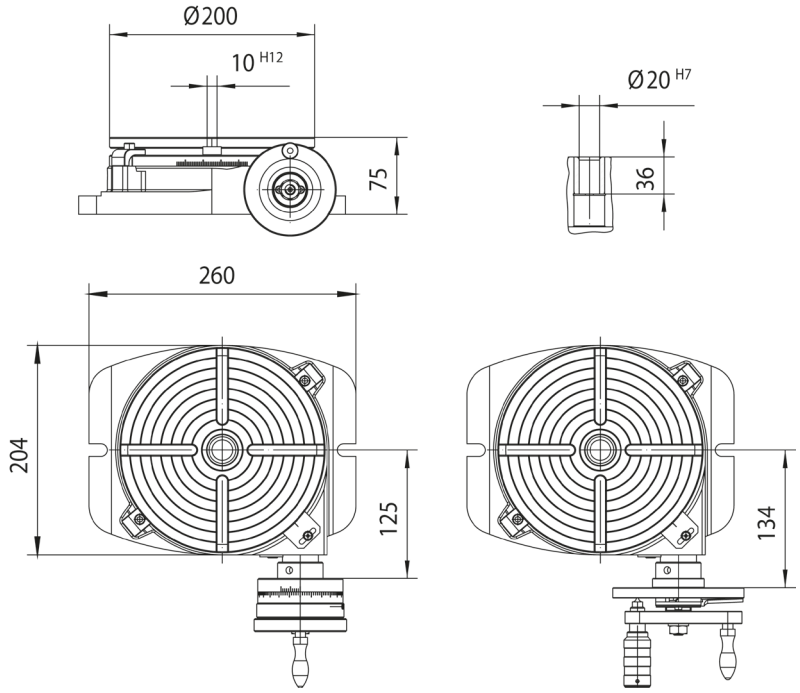

Accuracies

Size		20
Worm gear ratio	(i)	90:1
Indexing accuracy, indirect division	(sec)	± 30
Concentricity of the dividing spindle in the centre bore	(mm)	0.01
Axial runout of table plate	(mm)	0.01
Evenness of table plate	(mm)	0.01
Parallelism of the table plate to base area	(mm)	0.02
Weight	(kg)	19

Load and performance data

Size		20
Maximum load capacity for vertical axis	(kg)	80
Maximum axial force	(kN)	15
Maximum radial force	(kN)	5
Tilting moment indexing spindle clamped	(Nm)	300
Tangential moment with clamping	(Nm)	300

Manual Precision Rotary Tables R

MAIN CHARACTERISTICS

- Manual precision rotary table with compact and space saving design. The high rigidity allows the use for machine tools as well as for measuring applications
- Table plate with diameters from 200 to 400 mm and 360° graduation scale on the table plate circumference with zero point mark on the housing
- Direct indexing possible with disengaged worm drive via 360° graduation scale on the table plate
- Backlesh of worm drive easily adjustable by eccentric worm shaft bearin
- Relief of worm gear by two mechanical down hold clamps running in a notch on circumference of the table plate

DESIGNS

- R Manual rotary table with hand wheel and micrometer dial with vernier scale
- RI Manual rotary table equipped with hole plate attachment for indirect indexing for divisions up to 50
- RD Manual rotary table equipped with a hand wheel and micrometer dial for indirect indexing and additional possibility, for direct indexing with 24 indexing positions for divisions 2, 3, 4, 8, 12 and 24, after moving the worm gearing completely disengaged
- RDI Manual rotary table equipped with hole plate attachment for indirect indexing for divisions up to 50 and additional possibility, for direct indexing with 24 indexing positions for divisions 2, 3, 4, 8, 12 and 24, after moving the worm gearing completely disengaged.

ACCESSORIES

- Manual 3 jaw chucks with intermediate flange for mounting to the table plate
- Micrometer dial and hole plate attachment exchangeable
- Additional hole plate for hole plate attachment available. Together with standard hole plate all divisions from 2 to 100 and many up to 400 are possible with attached indexing table

Precision Rotary Table R

Precision Rotary Table RI

Precision Rotary Table RD

Precision Rotary Table RDI

TECHNICAL DATA

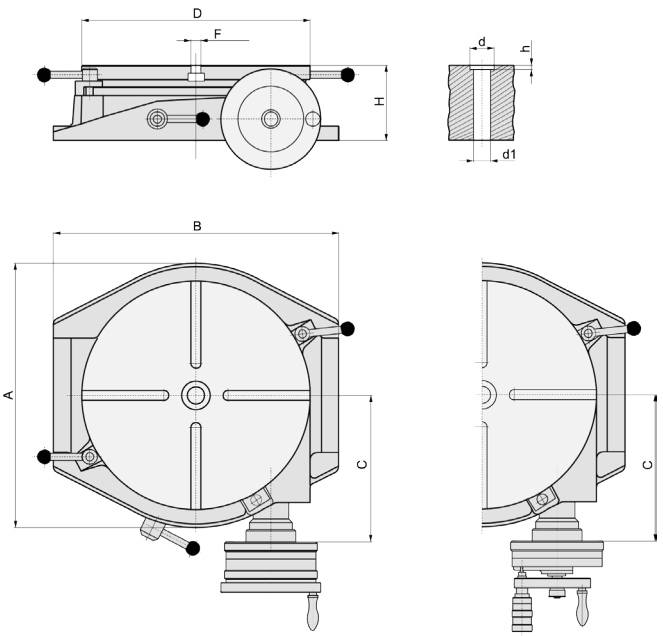

Size		250	320	400
A	(mm)	300	370	460
B	(mm)	340	390	520
C	(mm)	205	205	273
d^{H7}	(mm)	26	26	35
d1	(mm)	20	20	26
D	(mm)	250	320	400
F^{H12}	(mm)	12	14	14
h	(mm)	6	6	8
H	(mm)	105	105	134
No. of T-Slots	(pcs)	4	4	8
Weight	(kg)	49	67	131

Load and performance data

Size		250	320	400
Maximum load capacity with vertical axis	(kg)	200	250	300
Maximum axial force	(kN)	30	40	45
Maximum radial force	(kN)	10	120	15
Tilting moment indexing spindle clamped	(Nm)	800	1,000	1,200
Tangential moment with clamping	(Nm)	600	800	1,000

Accuracies

Size		250	320	400
Transmission ratio worm gear	(i)	90:1	90:1	90:1
Indexing accuracy indirect	(sec)	± 15	± 15	± 15
Indexing accuracy direct	(sec)	± 15	± 15	± 15
Circular runout of indexing spindle at centring bore	(mm)	0.01	0.01	0.01
Axial running of table plate surface	(mm)	0.01	0.01	0.01
Flatness of table plate surface	(mm)	0.01	0.01	0.01
Parallelism table plate to base area	(mm)	0.02	0.02	0.02

Manual Precision Angled Rotary Tables WR

MAIN CHARACTERISTICS

- Manual rotary table WR is a manual precision angled rotary table in a compact, space-saving design with high rigidity. He has been designed for use with horizontal or vertical turning axis on machine tools or for measuring tasks.
- The table diameters of 250 mm bis 400 mm with degree scale at the size an zero point reticle at housing
- Direct indexing when swiveled worm gear possible
- Adjust the clearence in the worm gear due to eccentric adjustment possible
- Discharge of the worm gear drive when high processing forces due to manual operate clamping of the table plate response by two toe clamps in the groove of the table plate

DESIGNS

- WR Angled rotary table with graduating drum and vernier scale
- WRI Angled rotary table with dividing plate indexing device
- WRD Angled rotary table with graduating drum and vernier scale, and direct indexing device
- WRDI Angled rotary table with dividing plate indexing device and direct indexing device

ACCESSORIES

- Rigidity, manual operated tailstocks for use at horizontal rotary axes of the table plate
- Manual three jaw chuck with intermediate flange for fastening the table plate
- Graduating drum and hole plate attachment compatible
- Additional hole plate for hole plate attachment available. Together with standard hole plate all divisions to 100 and many up to 400 are possible with attached indexing table

Accuracies

Baugröße		**250**	**320**	**400**
Transmission ratio worm gear	(i)	90:1	90:1	90:1
Indexing accuracy indirect	(sec)	± 15	± 15	± 15
Indexing accuracy direct	(sec)	± 15	± 15	± 15
Circular runout	(mm)	0.01	0.01	0.01
Axial running	(mm)	0.01	0.01	0.01
Flatness of table plate surface	(mm)	0.01	0.01	0.01
Parallelism table plate to base area	(mm)	0.02	0.02	0.02
Perpendicularity table plate to angular surface	(mm)	0.02	0.02	0.02

TECHNICAL DATA

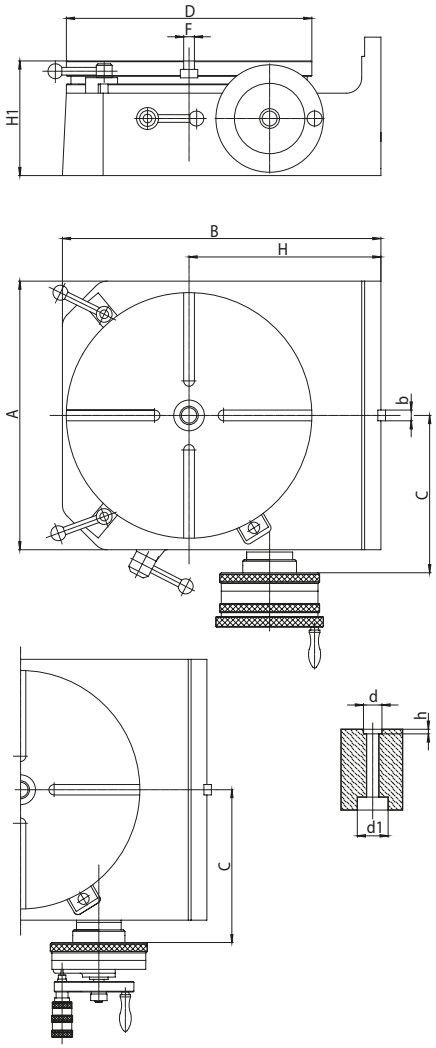

Size		250	320	400
A	(mm)	280	330	426
b	(mm)	14	14	14
B	(mm)	330	415	505
C	(mm)	205	205	273
d^{H7}	(mm)	26	26	35
d1	(mm)	20	20	26
D	(mm)	250	320	400
F^{H12}	(mm)	12	14	14
h	(mm)	6	6	8
H	(mm)	200	250	300
H1	(mm)	125	140	190
No. of T-Slots	(pcs)	4	4	8
weight	(kg)	67	87	218

Load and performance data

Size		250	320	400
Maximum load capacity with vertical rotary axis	(kg)	200	250	300
Maximum load capacity with horizontal rotary axis	(kg)	125	160	200
Load capacity with horizontal rotary axis with tailstock	(kg)	250	320	400
Machining force axial, centric	(daN)	3,000	4,000	4,500
Machining force radial, centric	(daN)	1,000	1,200	1,500
Tilting moment vertical rotary axis	(Nm)	800	1,000	1,200
Tilting moment horizontal rotary axis	(Nm)	180	240	320
Tangential forces	(Nm)	600	800	1,000

Dividing manually

Swivelled Dividing Heads TSH

MAIN CHARACTERISTICS

The dividing unit TSH-100 can be universally used on engraving, milling, grinding or drilling machines to cut polygonal surfaces or pitch circles.

The clamped dividing spindle can be divided by worm gear, direct dividing or 360 degrees freely by hand.

The dividing unit can be swivelled and clamped in any position between 0 and 90 deg. Therefore, the work piece can be brought into every position.

The indexing accuracy achievable is ± 2'.

DIVIDING OPTIONS

- Indirect-Dividing
  by worm gear with a transmission ratio of i=60:1 with hand wheel and micrometer dial
- Direct-Dividing
  by locking bolts and notching disk with sixty notches for the numbers of division 2, 3, 4, 5, 6, 10, 12, 15, 20, 30, 60
- Direct-Dividing
  by graduation scale with vernier on the dividing spindle
- Swivelling
  The swivelling movement of the dividing spindle housing is carried out freely by hand. The adjustment with zero mark is carried out on the graduation scale of the swivelling bearing

TECHNICAL DATA

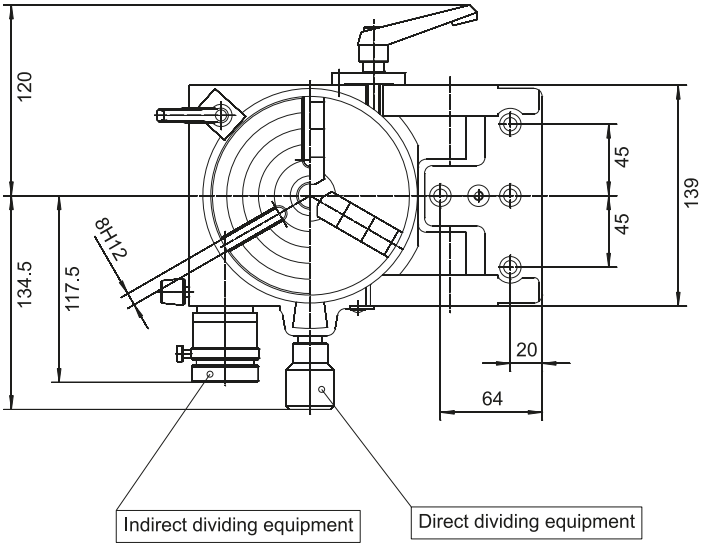

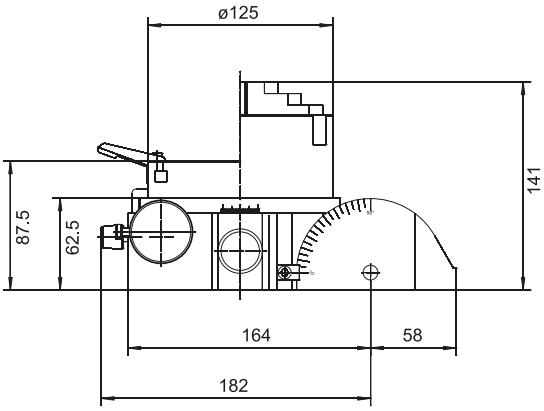

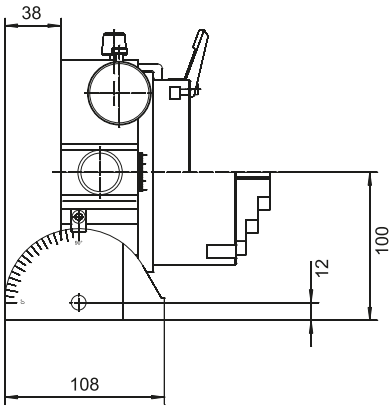

Accuracies

Size		100
Indexing accuracy	(min)	± 2
Accuracy of reading of the micrometer dial	(min)	10
Accuracy of reading of the swivel axis	(°)	1
Concentricity of the dividing spindl	(mm)	0.015
Run-out accuracy of the dividing spindle	(mm)	0.015
Parallelism of the dividing spindle to base area	(mm)	0.02
weight	(kg)	10

Load and performance data

Size		100
Maximum load capacity for horizontal axis	(kg)	10
Maximum load capacity for horizontal axis with tailstock	(kg)	20
Maximum load capacity for vertical axis	(kg)	20
Maximum axial force	(kN)	3
Maximum radial force	(kN)	1
Tilting moment workpiece	(Nm)	30
Tilting moment indexing spindle clamped	(Nm)	80

Dividing manually

Swivelling Precision Rotary Tables HPRS

MAIN CHARACTERISTICS

- Manual, swivelling precision rotary table HPRS in a compact, space-saving design with high rigidity for use for measuring tasks or on machine tools
- Table plate with diameter of 320 mm and with degree scale at the size an zero point reticle at housing
- Direct indexing when swiveled worm gear possible
- Easy and accurate positioning in both axis with hand wheels and measuring drums. The rotary axis can alternativly equip with a with hole plate attachment
- Discharge of the worm gear when high processing forces due to manual operate clamping of the table plate and the swivel axis

DESIGNS

- HPRS-T swivelling Rotary table with hole plate attachment in the rotary axis and with graduating drum in the swivel axis.

  A indexing table for the hole plate attachment belongs to the delivery, too.
- HPRS-M swivelling rotary table with graduating drum in the Rotary axis an in the swivel axis

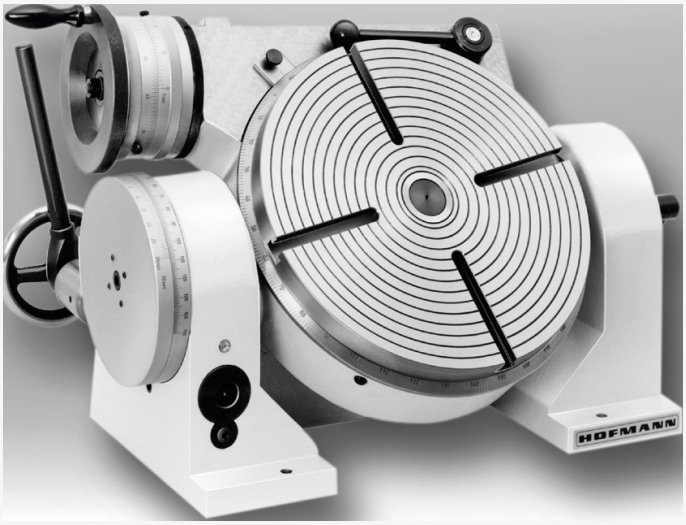

ACCESSORIES

- Manual three jaw chucks with intermediate flange for fastening the table plate

  Manual operated tailstocks for use in the 90-degree-position of the table plate
- Graduating drum and hole plate attachment compatible
- Additional hole plate for hole plate attachment available for all divisions to 100 and many up to 400 are possible with attached indexing table

TECHNICAL DATA

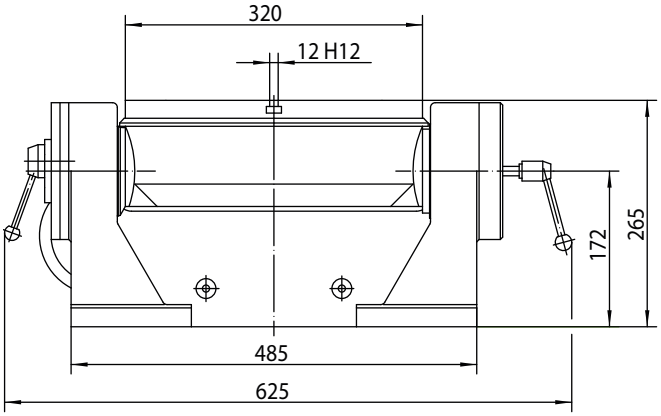

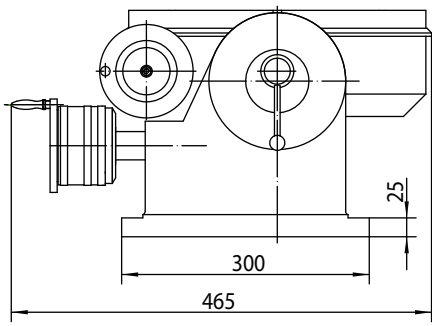

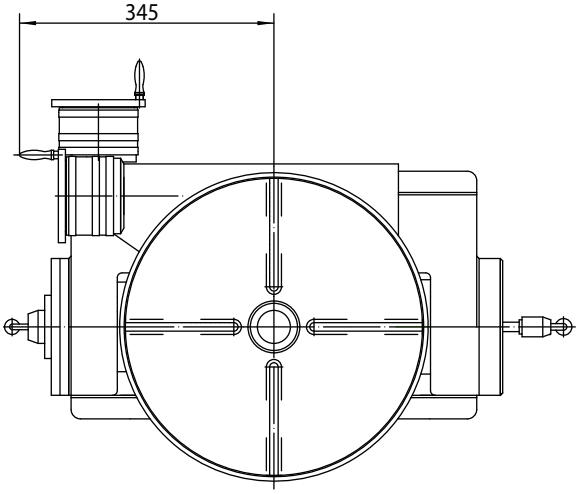

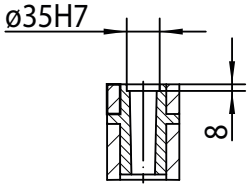

MT4

Load and performance data

Size		320
center height with vertical table plate	(mm)	172
Transmission ratio worm gear rotation axis	(i)	180:1
Transmission ratio worm gear tilting axis	(i)	90:1

Accuracies

Size		320
Indexing accuracy rotation axis, standard	(sec)	± 10
Indexing accuracy tilting axis	(sec)	± 60
concentricity	(mm)	0.01
Run-out accuracy	(mm)	0.01
evenness of the table plate (empty)	(mm)	0.01
Parallelism table-/base plate	(mm)	0.02
weight	(kg)	160

Balancing Stands ABS / ABL

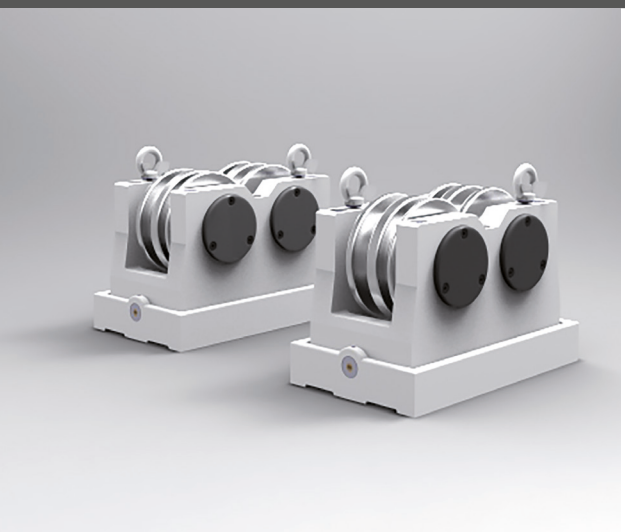

BALANCING STANDS ABS

for static balancing of heavy and extremely heavy rotors, or for concentricity tests.

Each set of balancing stands will be supplied as a set of two individual balancing stands, each with two hardened and ground balancing rollers.

The balancing rollers are pivoted in ball bearings and are arranged in an overlapping manner. The balancing rollers's width enables testing bodies to be used with axes of a lesser surface hardness.

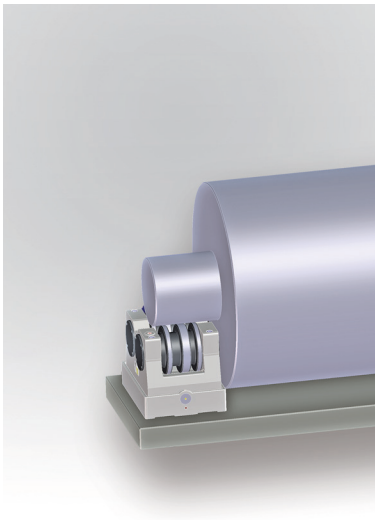

Size		ABS-2	ABS-10	ABS-50
Load capacity	(kg)	80 bis 2,000	400 bis 10,000	2,000 bis 50,000
Maximum rotor diameter on rollers	(mm)	150	250	300
Concentricity	(mm)	0.01	0.01	0.01
Set weight	(kg)	66	182	580

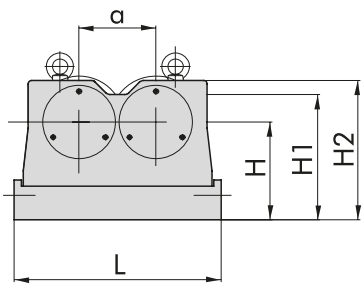

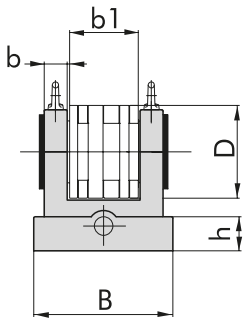

Size		ABS-2	ABS-10	ABS-50
a	(mm)	100	126	185
b	(mm)	34	45	82
b1	(mm)	70	114	180
B	(mm)	155	225	360
D	(mm)	120	150	212
h	(mm)	40	55	100
H	(mm)	120	160	254
H1	(mm)	153	200	302
H2	(mm)	180	235	360
L	(mm)	260	340	480

BALANCING STANDS ABL

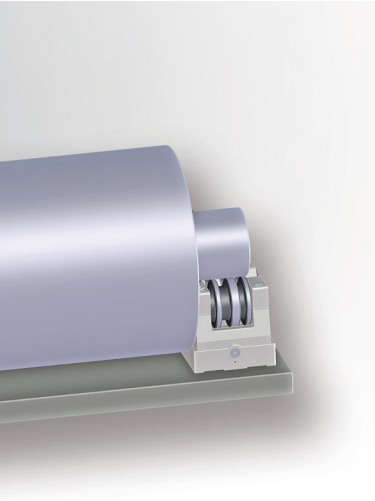

for static balancing of disc-shaped parts or for concentricity tests.

Each set of balancing stands will be supplied as a set of two individual balancing stands, each with two hardened and ground narrow balancing discs.

The balancing discs are mounted in ball bearings and are arranged so that they can accomodate even small bearings.

Size		ABL-10	ABL-100	ABL-400
Load capacity	(kg)	0.1 bis 10	5 bis 100	20 bis 400
Maximum rotor diameter on roller discs	(mm)	100	200	400
Concentricity	(mm)	0.005	0.005	0.005
Set weight without any base rail	(kg)	8	20	56
Weight with clamping device	(kg)	9	21	58
Set weight with base rail 1,000 mm	(kg)	43	55	118

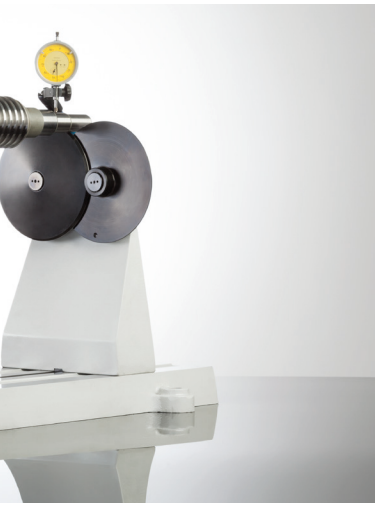

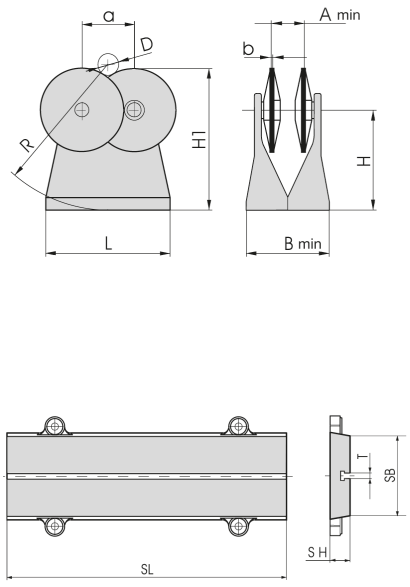

Size		ABL-10	ABL-100	ABL-400
a	(mm)	63	100	130
A min	(mm)	45	70	80
b	(mm)	6	9	12
B min	(mm)	120	160	230
D	(mm)	100	160	200
H	(mm)	170	250	380
H1	(mm)	220	330	480
L	(mm)	200	200	360
SB	(mm)	200	200	360
SH	(mm)	50	50	70
SL	(mm)	1,000	1,000	1,000
T	(mm)	14	14	14

Collet Chuck Stands Z

MAIN CHARACTERISTICS

Collet chuck stands Z for fast attachment of work pieces with collet chucks. For the use on drilling and milling machines, threading cutting devices as well as for use in measuring devices.

Commercially available standard collet chucks are used for round, square or hexagonal material.

The base body of the collet chuck stands is painted in textured paint RAL 7035 light grey; the union nut and the tension lever are bronzed.

DESIGNS

- without collet chuck Spannzange
- with collet chuck
- with round collet chuck
- with square collet chuck
- with hexagonal collet chuck

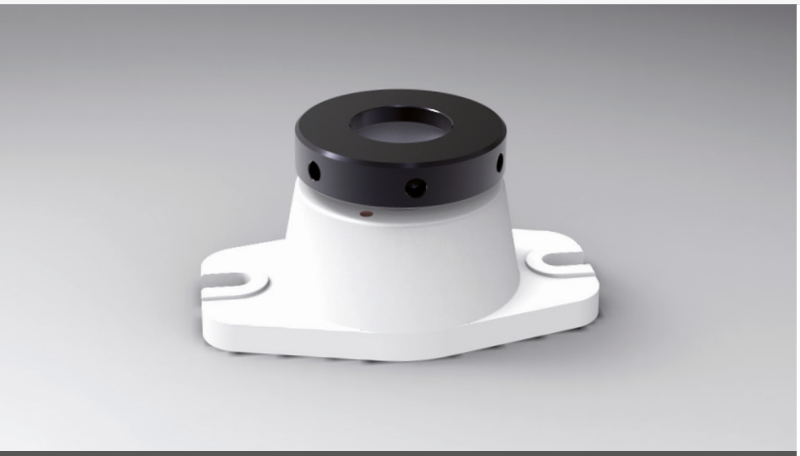

Collet Chuck Stand

Collet Chuck Stand with clamping lever

TECHNICAL DATA

Size		Z-B	Z-D
Weight	(kg)	3.5	8.5
Type of collet chuck	(E)	161	173

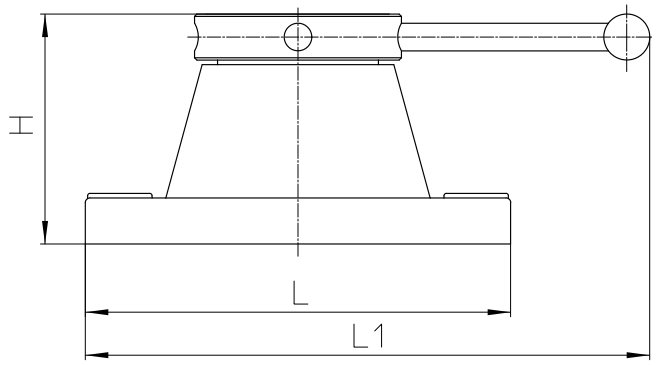

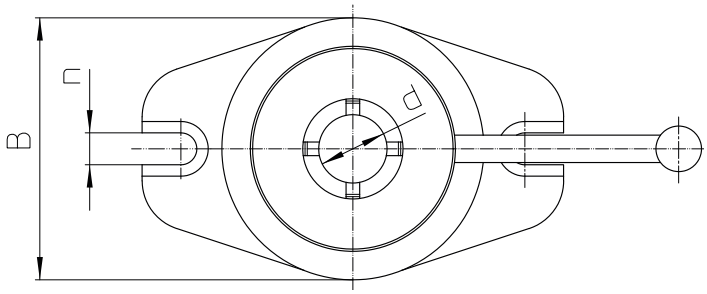

Size		Z-B	Z-D
B	(mm)	96	135
d round	(mm)	2 - 26	1 - 42
d square	(mm)	5 - 18	6 - 30
d hexagonal	(mm)	4 - 22	6 - 36
H	(mm)	80	100
L	(mm)	160	210
L1	(mm)	273	347
n	(mm)	14	14

Werkzeugsysteme Müller GmbH
Hofmann Mess- und Teiltechnik

Robert-Bosch-Straße 5 | 72124 Pliezhausen
Telefon +49 7127 97558-130 | Telefax +49 7127 97558-015
info@hofmann-mt.de | www.hofmann-mt.com